From:	Terry Spragg
To:	comments_EIR@DeltaCouncil
Cc:	Ggrayi@aol.com; RMSeed6@aol.com; "Robert Bea"; Grindstaff, Joe@DeltaCouncil; Isenberg, Phil@DeltaCouncil; "Clifford Goudey"
Subject:	Spragg Emergency Fabric Pipeline Proposal
Date:	Friday, November 04, 2011 11:48:20 AM
Attachments:	Delta Cover Letter to DWR from Cliff re Fabric pipeline preliminary proposal.htm Delta DWR Emergency Fabric Pipeline Proposal August 2011.pdf Ray Seed Joe Grindstaff Delta fabric pipeline email.pdf

---

To the DSC,

In Section 5.4.3.1 of the Draft DSC report it states that, *"The Delta Plan encourages projects that will include…conveyance facilities."*

I would like to request the inclusion in the Delta Plan Draft Report a DSC staff analysis of the Emergency Fabric Pipeline Proposal that was submitted to DWR at their request on August 11, 2011 by Terry G. Spragg & Associates, and that was described in an email to Joe Grindstaff (DSC) from Professor Ray Seed (U.C. Berkeley) dated October 4, 2010 (see attached documents). Additional information is available from Spragg & Associates for this analysis.

If DWR and others are spending ten's of millions of dollars to stockpile rocks, which many respected experts say will not be of use during a catastrophic levee collapse following the liquefaction of many of the Delta levees (which is the scenario that the Draft DSC report says will be the most likely result following a major earthquake in the Delta region) then in comparison to these expenditures the expenditure of funds to test the validity of an Emergency Fabric Pipeline in the Delta would seem to be a reasonable expenditure.

I would like to ask for a written response from the DSC to this request.

Terry Spragg

From: Clifford Goudey [cliffgoudey@gmail.com]
Sent: Thursday, August 11, 2011 8:53 AM
To: Balakrishnan, Ariya
Cc: Terry Spragg
Subject: Fabric pipeline preliminary proposal

Attachments: Spragg pipeline proposal.pdf
Ariya,

I am pleased to transmit as an attachment to this email our preliminary proposal for a technology demonstration of the Spragg Flexible Fabric Pipeline. Since our communications in March we have gathered the information needed to prepare our cost estimates for the pipeline modules necessary to implement a meaningful evaluation in the Delta setting. As we have noted, there are many issues related to where such a demonstration would occur that will impact its total cost. A collaborative process will be needed to further refine an actual plan of action.

During the preparation of this preliminary proposal we have sought and received guidance from experts in water supply technology and California water issues. Of particular note are reviews from the following individuals that have been incorporated into this document.

Jason Weeks, Senior Engineer, Water Replenishment District of Southern California
Marc Serna, Manager of Engineering, West Basin Municipal Water District
Dick Rhone, Senior Engineer, GSI Consultants

I am hopeful that this preliminary proposal can serve as a basis for further discussion and a better understanding on our part of how this potential solution fits into the contingency planning needed to preserve the water flows of the Delta.

While much of what is described in the attachment is the subject of USPTO filings, we ask that the distribution of this document be done on a need-to-know basis for its review within DWR. Please feel free to contact me or Terry Spragg <spraggbag@gmail.com> if you have any immediate questions. We look forward to assisting the Department of Water Resources in any way possible as you consider these matters.

Respectfully,

Cliff
--
Clifford A. Goudey,
21 Marlboro Street
Newburyport, MA 01950
Email: cliffgoudey@gmail.com
Phone: 978-465-2238
Cell: 978-914-1901
Skype: Cliff_Goudey

Delta Flexible Pipeline Demonstration Proposal

Submitted to
Division of Engineering, California Department of Water Resources
By
Terry G. Spragg & Associates

Background

This proposal is submitted in response to concerns over a significant seismic event in Northern California that would destabilize multiple levees protecting islands in the Sacramento–San Joaquin River Delta. These levees provide the channels that convey fresh water from its northern to southern portions and are shown in Figure 1. Clifton Court, where water is extracted for conveyance to Southern California is noted.

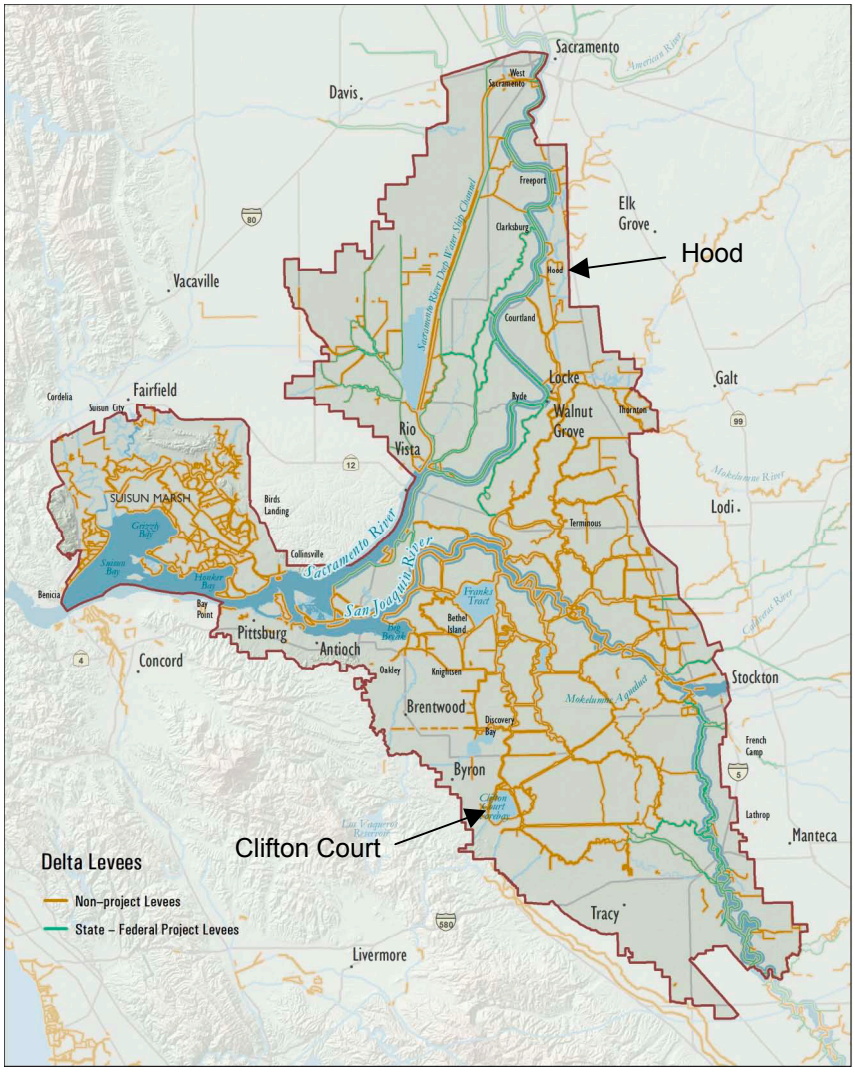

Figure 1. The Sacramento–San Joaquin River Delta and its levees.
(from Fifth Staff Draft Delta Plan)

Levee failures may result in the inundation of some Delta islands, causing saltwater intrusion into the Delta displacing the freshwater that is normally in the channels that convey fresh water from its northern to southern portions. In this proposal we do not address the likelihood or the magnitude of such catastrophic events, rather we propose a rapidly deployable system for maintaining the flow of fresh water across a compromised area within the Delta.

The system herein proposed offers effectiveness, flexibility, rapid implementation, and low cost as its primary advantages. In addition, the ability to pre-deploy system components in order to rapidly respond to levee failures regardless of where they occur and their magnitude is an important feature. The system we propose is modular, portable, quickly deployed in a variety of configurations and represents a reliable solution for both short-term emergency situations and medium-term situations where cost is an important factor.

The Spragg Flexible Fabric Pipeline

Terry G. Spragg & Associates has been developing systems for the cost effective conveyance of fresh water for over two decades. Early efforts focused on the transport of water in large fabric barges that could be efficiently towed in end-to end formations from regions of fresh water abundance to regions of drought. More recently, and in response to water needs over shorter distances, our attention has broadened to include the application where the fabric 'container' is fixed and the water flows through it. The innovations associated with these technologies are protected through the US patent office and worldwide patent protection is in process.

Conceptually, the flexible fabric pipeline is quite simple. It is a watertight tube of a specific circumference fabricated from coated fabric. Were this pipeline filled with fresh water and positioned within a body of water of the same fluid density, the pipeline's cross-section would be circular. This is seldom the case due to impurities or salinity in the surrounding water and instead it takes a shape as shown in Figure 2.

The actual shape in terms of the width vs. the depth of the cross section is a function of the internal pressure and the circumference. Figure 2 portrays a situation where the cross sectional area is roughly 90% of a full circular cross section.

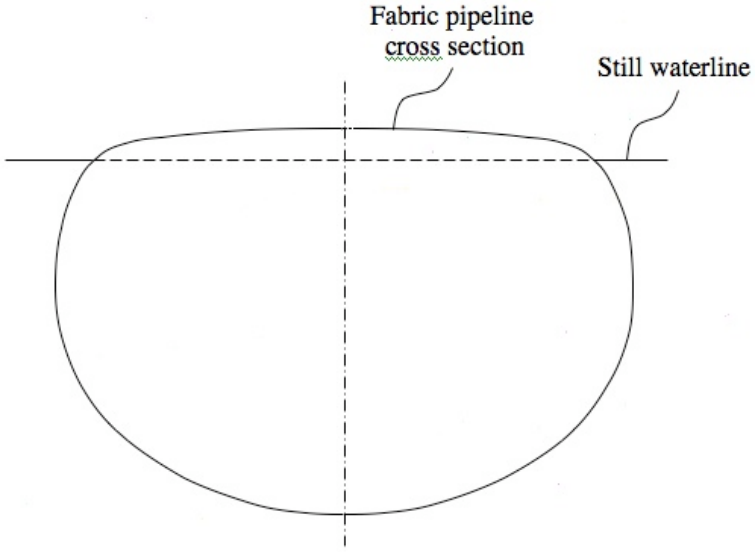

Figure 2. A typical cross sectional shape of a floating fabric pipeline.

The pressure represented by this shape is equal to the head height of the highest portion of the pipeline above the still waterline. Internally, the fluid pressure varies with depth and that determines the location of maximum fabric curvature, which is always at the waterline. The area of the cross section found below the water line compared to the total area is equal to the ratio of the internal and external water densities.

Floating at the surface in low-current and low-wave environments is the most benign setting for this fabric pipeline. In such situations the system need only to be moored in place and offered protection against damage from vessel traffic. Such a configuration is shown in Figure 3 where reinforced webbing straps lead to anchor lines that keep the floating fabric pipeline in place along its route. The strength and the spacing of these mooring attachments depend on the setting in which the pipeline is to be deployed

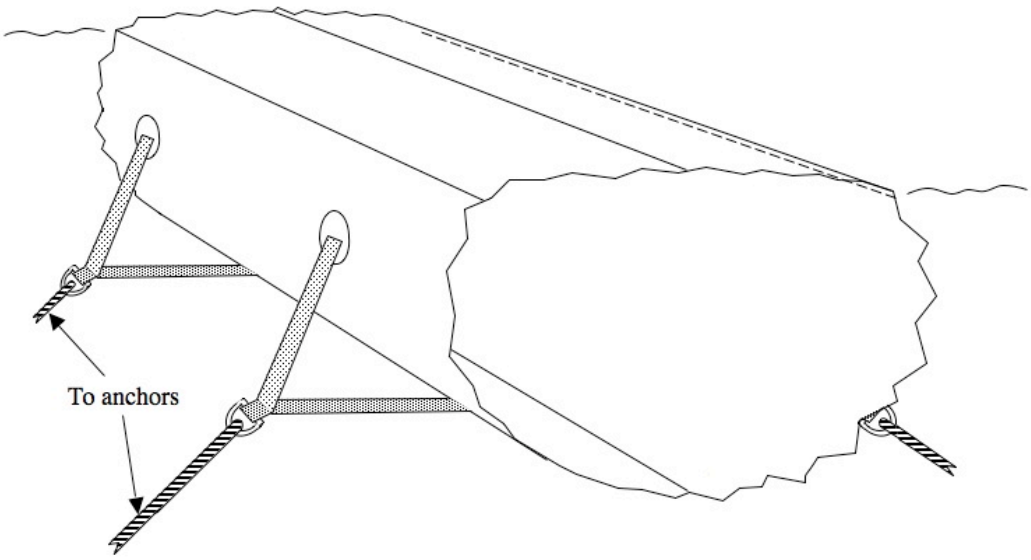

Figure 3. The mooring arrangement for a floating fabric pipeline.

Because of the complex geography of the Delta and the unpredictable nature and location of catastrophic levee failures, other deployment arrangements may be needed. To that end, the Spragg Flexible Fabric Pipeline can be deployed completely submerged as well as on dry land.

Fresh water, being less dense than brackish water or full-salinity seawater, tends to float on the surface even when contained in a fabric pipeline. The force needed to submerge that contained fresh water is easily calculable based on the density difference and the cross sectional area of the pipeline. For example a pipeline with a nominal diameter of 6 feet has a cross sectional area of 28.3 sq. ft. A 10-foot long section of this pipeline would have a volume of 283 cu. ft. and a maximum submerged net buoyancy of approximately 500 pounds. It would therefore be relatively easy to submerge the fabric pipeline in areas where the conditions demand, such as for vessel navigation or to avoid undesirable environmental conditions at the surface. Given the emergency vessel traffic associated with a major levee collapse, this is an essential feature.

The submerged version of the proposed fabric pipeline has a different cross sectional shape compared to the floating version. Figure 4 shows such a cross section where the shaded portion is the conveyed water and the portion below is the anchoring means.

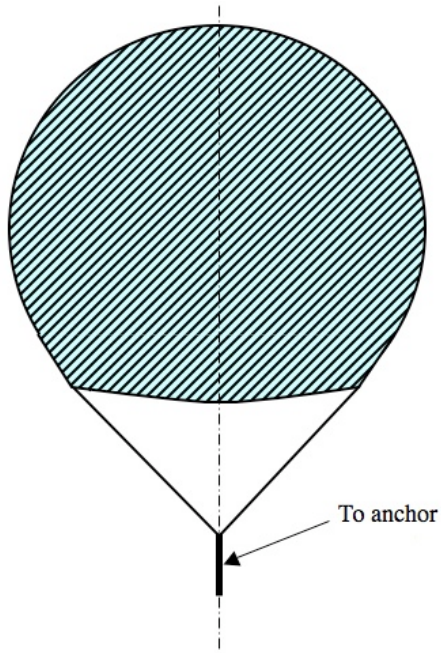

Figure 4. The cross sectional shape of a submerged fabric pipeline.

This is more easily seen in Figure 5 where the mooring loads that keep the pipeline submerged are distributed into its length through the use of a pair of fabric skirts with lower edges in the form of a catenary. Much like catenary cables of a suspension bridge, this arrangement can keep the pipeline at a uniform depth and eliminate concerns that the pipeline might buoy up in between the anchor locations.

The lower edges of the catenary skirts are reinforced with a tension member (steel cable or a high-modulus line). The size and spacing of the anchors depend on the size of the pipeline and the ability to pretension the catenary lines.

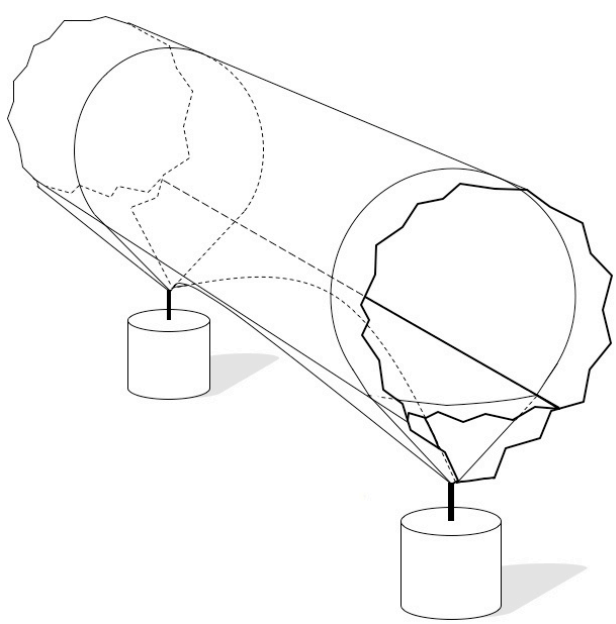

Figure 5. The submerged fabric pipeline.

In areas where submergence is called for and where the bottom is of suitably uniform depth, an alternate submerged configuration can be employed as is shown in Figure 6. In this case, two continuous ballast pockets are formed on the two lower sides of the pipeline. These pockets are filled with sand or gravel through purposely-designed openings during the deployment process. Air can escape from these pockets through perforations or the pockets themselves can be fabricated from porous fabric. The pockets and contained ballast are sufficient to firmly affix the pipeline directly on the bottom, minimizing its intrusion into the water column and risks of damage from surface traffic.

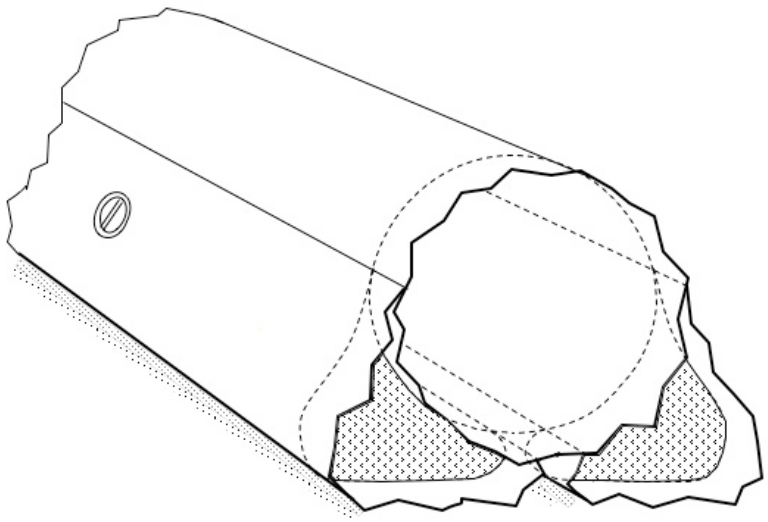

Figure 6. The bottom-deployed fabric pipeline.

The final configuration of the fabric pipeline is its deployment on land. In this case its cross section takes a shape resembling an ellipse, though as shown in Figure 7, it becomes flattened on the side upon which it rests.

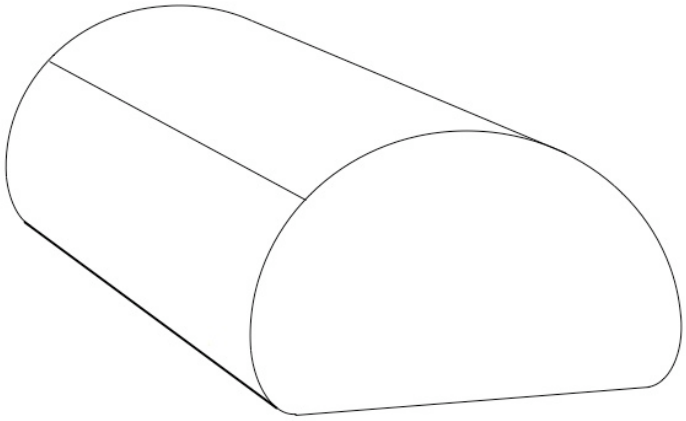

Figure 7. The land-based fabric pipeline.

While this is the simplest configuration it is also one that imposes the greatest stress on the enclosing fabric due to the unsupported height of water within the pipeline cross section. As a result, the in-the-water configurations have the greater flow capacities for a given pipeline circumference and pressure ceiling.

Flow Through a Fabric Pipeline

Pressure loss in circular pipes is modeled by the Hazen-Williams Equation

$$f = 0.2083\ (100/c)^{1.852} \times q^{1.852} / dh^{4.8655}$$

where

f = friction head loss in feet of water per 100 feet of pipe (ft_{H20}/100 ft pipe)
c = Hazen-Williams roughness constant (150 for coated fabric)
q = volume flow (gal/min)
dh = inside hydraulic diameter (inches)

This formulation is applicable to the Spragg Flexible Fabric Pipeline since its cross sectional area is normally 90% or more of a circular pipe. The friction head loss from the formula determines the pressure that is required at the inlet of the pipeline to attain the desired flow rate. However, the pressure is limited by the hoop stress the pipeline material can sustain.

The coated fabric used in the Spragg Flexible Fabric Pipeline has strength in both the warp and weft directions in excess of 1,000 pounds per inch. Our specifications for maximum pressure include a four to one safety factor.

We propose a pipeline made of this fabric that has a circumference of 230 inches and an unstressed diameter of 73.2". A flow rate of 90,000 gallons per minute is equivalent to 145,000 acre-feet per year. Under these conditions there is a frictional head loss of 1.5" per 100 feet of fabric pipe, which translates into 13.2 feet of head loss for a two-mile length of pipeline or an internal pressure requirement of 5.67 psi. at the inlet of the pipe to maintain that flow. This generates in 207 pounds per inch of fabric stress, decreasing over the length of the pipeline to the next pumping station.

The Spragg Flexible Fabric Pipeline can be made any length as long as the pressure requirements for maintaining flow stay within these above limits. In order to facilitate handling, the pipeline is provided in 250-foot-long modules. The 50 oz. per sq. yd. fabric for the basic pipe section results in a 1700-pound module.

The modules can be joined by one of three methods. The first is a waterproof, high-strength zipper that allows rapid interconnections in the field. The second method is the use of a stiff internal mandrel with external rod clamps. This is a particularly useful approach when connecting a fabric section to a rigid portion of the pumping infrastructure, but can also be used for section joining as well. A third method is field ultrasonic welding of one section to another, an approach that requires specialized on-site equipment.

The 145,000 acre feet per year delivery capacity of one of these pipelines would provide 36% of the amount of water the Metropolitan Water District (MWD) is allowed to take from the river in a drought year. A parallel system of three of these fabric pipelines would exceed that needed capacity. Four fabric pipelines lying side by side would be able to annually deliver 580,000 acre feet of good quality water from Hood to Clifton Court. The required length and path for such a deployment would depend on the portions of the Delta that become inundated with saltwater and must be bridged in order to provide water of acceptable quality. The location of Hood is noted in Figure 1 and simulations of levee failure by the Metropolitan Water District of Southern California indicate it is beyond the intrusion range of levee damage resulting from a 6.5 magnitude earthquake.

A Proposed Technology Demonstration

In order to properly evaluate the potential role of the Spragg Flexible Fabric Pipeline in confronting a Delta emergency, one need only demonstrate the performance of the portion of the pipeline between two pumping stations. Therefore Spragg Associates proposes the testing of a two-mile deployment of a 230-inch circumference system. This would involve the use of 42 sections of 250-foot length. These sections would comprise a suitable combination of module types depending on the preferred location of such a demonstration.

The required head and flow rate for such a demonstration could be provided in a number of ways, possible using pumping infrastructure already at the disposal of the Department of Water Resources. An example is diagrammed in Figure 8, showing what could be used to facilitate the experiment. The details of this head works need to be refined through discussions with DWR, as does the flow/pressure requirements and how best to meet them for the purposes of the test.

In addition, a suitable path for the temporary installation of this demonstration system needs to be identified. The costs associated with installation will depend heavily on the details and logistic requirements of that location. We have made no assumptions on matters or responsibilities associated with permitting, site preparation, deployment, energy costs, or decommissioning.

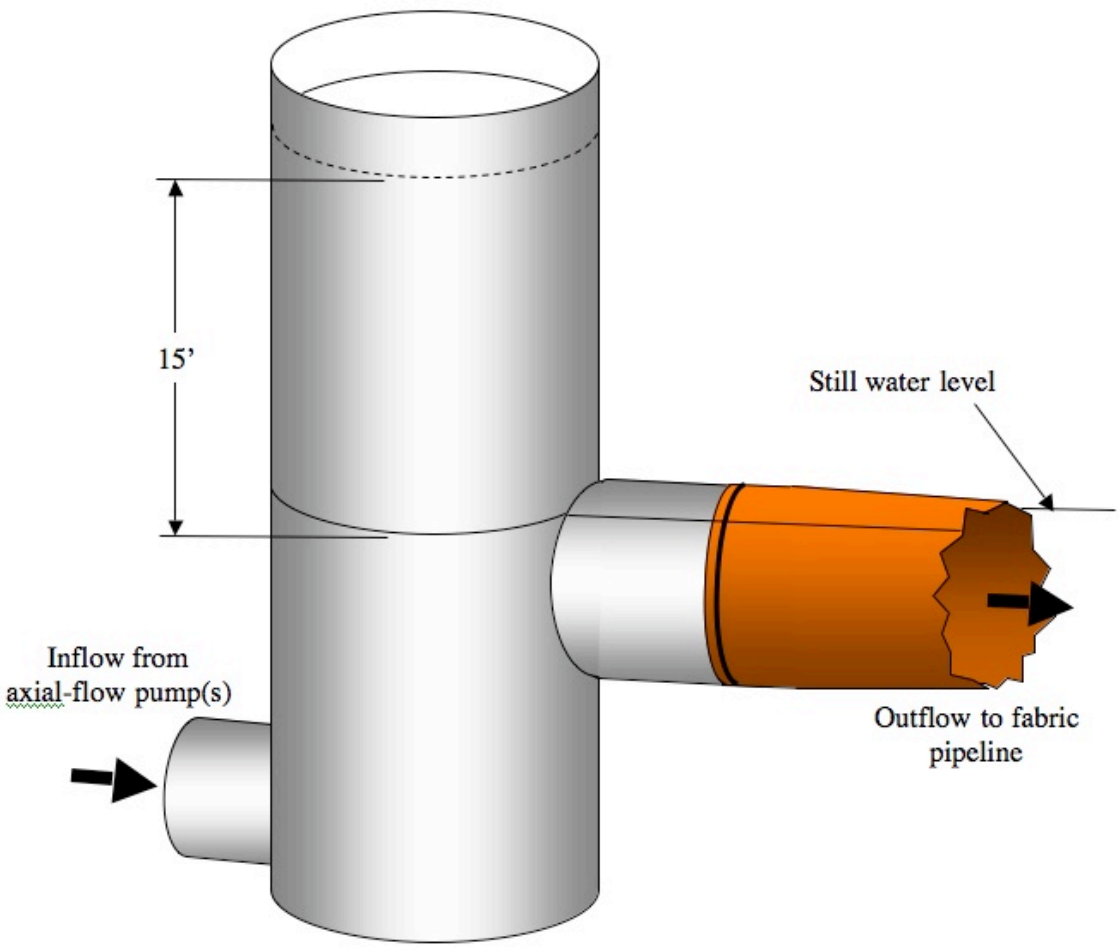

Figure 8. An example of head works for the fabric pipeline.

The Cost Proposal

The principal cost of the demonstration is for the pipeline modules and those costs will depend on the type of module needed for the combination of terrain and water along the route of the tests. We recommend that at least several modules of each type be included in the tests. The following cost proposal is based on a logical combination of modules, with the majority being surface-floating modules that would be positioned in a benign wave and current setting.

Summary of costs for a two-mile demonstration pipeline:

Quan.	Description	Unit cost	Cost
1	20' transition piece - head works to pipeline	$5,280	$5,280
20	250' x 230" circ. floating pipeline module	$37,950	$759,000
5	250' x 230" circ. submerged pipeline module	$57,200	$286,000
5	250' x 230" circ. seabed pipeline module	$45,100	$225,500
12	250' x 230" circ. land-based pipeline module	$36,300	$435,600
43	Total cost estimate for two-mile fabric pipeline		$1,711,380

These prices include materials and fabrication and are FOB Seattle. They do not include any installation or costs associated with the means of pumping. These can be estimated once the demonstration location, allocation of test responsibilities, and issues of permitting have been resolved.

A Component of Delta Preparedness

In the Fifth Staff Draft Delta Plan we read, "***Despite the risks of levee failure, no published emergency action plan exists that addresses the consequences to federal and State water supply deliveries in the event of catastrophic levee failure in the Delta***."

The draft plan continues, "***... failures are inevitable and will require the implementation of well-coordinated and carefully developed emergency-response planning efforts. ... The California Emergency Management Agency, DWR, and several local agencies are preparing individual emergency response plans for the Delta, but the development of these should be coordinated, tested, and practiced.***"

The Spragg Flexible Fabric Pipeline could be a key component of that emerging response plan with modules centrally warehoused or pre-positioned based on an assessment of levee seismic vulnerability and salt-water intrusion models. An attractive approach to maximize responsiveness would be a barge-mounted system that deploys two miles of pipeline modules and includes the power, pumps, and head works needed for immediate operation.

However, before such an approach can be implemented, tests are in order. The technology demonstration proposed above in an essential step towards preparedness. Terry G. Spragg & Associates looks forward to working with the DWR and other state agencies to take this first step.

Charlene Jensen

From: RMSeed6@aol.com

Sent: Monday, October 04, 2010 1:52 PM

To: joe.grindstaff@deltacouncil.ca.gov

Cc: phil.isenberg@deltacouncil.ca.gov; terry.macaulay@deltacouncil.ca.gov; eric.nichol@deltacouncil.ca.gov; elaine.martin@deltacouncil.ca.gov; Charlene Jensen

Subject: Spragg Water Conduit

Dear Joe,

We did not have time to explicitly discuss Mr. Spragg's "waterbag" technology, and so I was planning to get back to you guys this week after you have cleared through the last Council Meeting and its aftermath.

So the timing is good here.

Mr. Spragg originally proposed his waterbag technology as a potential emergency measure for transporting fresh water across a seismically damaged Delta a number of years ago. My assessment was that although it was a novel and interesting idea, it would not be very useful at the full State level as the volume of water that could be delivered via towed waterbags was too small, and as it would face likely difficulties with regard to constrictions, obstacles and potential puncture threats during transit across a badly damaged Delta.

I was struck, however, by the greater potential represented by using the same type of fabric technology to construct a modular fabric "pipeline" through the Delta. As noted in the attached E-mail from Tawnley Pranger (Chief, Response and Security Section, Division of Flood Management, DWR) there is some significant potential promise here.

DWR has been largely discouraged/disallowed from considering novel ideas that might represent either back-up plans or interim options until we achieve a seismically secure "permanent" facility as the current Administration had decided instead to bank everything on a more narrowly focussed effort to garner permission (and eventually permits) to construct such a facility. Interim plans, and emergency back-up plans, were correctly viewed as having the potential to confuse and complicate that process. In that context, Mr. Pranger's response that the idea may have merit and that it might warrant study was admirably brave and frank. It is arguably disappointing that you and the Council had not been informed of this response. And perhaps others like it.

My view is that such a singular focus on the current effort to push through a secure transmission facility was an inadvisably risky approach, given (1) the unacceptably high current stakes, (2) the unacceptable likelihood that a seismic disaster will occur before such a secure transmission facility can be put in place (which will take at least ten years, even if we begin right away.... and with a roughly 1.5% chance each year of seismic disaster in the interim), and (3) the likelihood that construction of a secure transmission facility will continue to be further delayed anyway (by political and legal obstacles and challenges, etc.). History suggests that we will continue to live with unacceptably high exposure to an unprecedented water disaster for some time to come, and as we discussed it is my view that interim and emergency back-up plans <u>should</u> be considered, and that promising alternatives should be pursued with all possible vigor.

We discussed examples of steps that could be usefully taken to begin to prepare for emergency post-seismic repairs in order to accelerate the rate at which water deliveries could begin to be restored. Acceleration of those repairs would reduce the State-wide economic and social calamity associated with major seismic damage to the Delta, and would also reduce the risk that environmental laws would be over-ridden by executive orders (both State and Federal) and that potentially massive long-term environmental damages would be done in order to restore water deliveries as rapidly as possible.

The types of steps that we discussed are far different from the types of steps that would be taken to

improve our ability to perform the more routine "non-seismic" finite levee breach repairs that we are well used to dealing with; and no seismically useful steps of that sort have yet been taken. Coupled with the recent restrictions on water deliveries imposed over the past two years by Judge Wanger, which have served to draw down south-of-Delta "emergency" water storage reserves (despite a couple of decades of progress in increasing such emergency storage, highlighted by the construction of the Eastside Reservoir), we are currently as vulnerable as we have ever been to potential seismic disruption (for a period of multiple years) of the Delta-centric portions of our state's water supplies. It is my understanding that Judge Wanger's recent (and stunning) partial reversal of his own rulings in this regard are not so much premised on his having had a personal epiphany upon re-reading our eloquent Blue Ribbon Panel espousal of "co-equal" values; instead, they are a result of his having had the true level of vulnerability explained to him. A potential National Security issue.

Given the current level of risk, and the high stakes, interim and emergency response enhancement alternatives should be pursued. In addition to those types of alternatives that we did have time to discuss a bit, additional alternatives should be considered as well.

The "fabric pipeline" idea has potential merit here. The cost is low; apparently on the order of $30 to $40 million for a 6-foot diameter pipeline running fully across the Delta from a northern Sacramento River source to the Clifton Court Forebay. That would not be the entire cost, but instead only the cost of the fabric pipeline itself. Pumps would be needed at intake and to boost transmission, and a second set of pumps (at least) would be needed in the mid-Delta to pump up to the Clifton Court location (the Clifton Court pumps cannot "draw" the water by suction; "fabric" pipelines would require positive pressures and would simply collapse under any negative pressures or "suction"). So there would be additional costs for pumps, and also for intake and outflow connectivity details.

I am not an expert on fabric pipeline hydraulics, and do not know what types of circumferential stresses the fabric pipeline could safely sustain, and so I cannot estimate how much water such a line could transmit. But it would be a great deal more than zero, and in a time of emergency (and dire need), that could be a Godsend. (The fabric tubes would be largely submerged in Delta waters, and that would serve to provide an external buttressing force, and to reduce circumferential stresses; increasing capacities.) And there is no obvious reason why we would use only one such fabric pipeline. If the systems works, multiple fabric pipelines could be installed; they are a "modular" potential measure.

In the event of a seismic water catastrophe in the Delta, the costs associated with such a system will not be an issue. We will expend literally billions of dollars to rapidly expedite eventual "permanent" repairs, and we will simultaneously sustain far higher economic losses and social disruption due to lack of water deliveries until that is achieved. The economics that currently prevail under "ordinary" circumstances" will not be applicable; and massive Federal resources will be brought to bear.

The fabric pipelines may be a potentially feasible emergency measure to partially mitigate the current potential for a seismically induced water disaster. Apparent advantages might include:

1. Relatively low cost.
2. The apparently environmentally benign nature of the system (as compared to massive dredging, etc., and potential semi-permanent rearrangement of channels and flow to otherwise expedite "regular" levee repairs and reconstruction.)
3. The rapidity with which the system could be deployed.
4. The modular nature of the system, so that it can be progressively expanded (additional pipelines added) over the initial months after an earthquake.
5. The system itself would appear to be rapidly repairable, and so could be maintained in a resilient manner for several years in the face of urgent levee repair and reconstruction efforts.

"Potentially feasible" is an important phrase, however. This is a novel proposal, and it would need to be studied, and field tested.

I understand that the Delta Council is not funded to undertake such development work. But the Council is empowered to recommend that interim and emergency response alternatives be considered, and that promising alternatives be advanced by means of study and proof-testing (e.g. by DWR, or others.) Also that suitable investments be made (in conjunction with development of realistic post-seismic emergency response plans) in promising/viable measures.

Given its attributes, the "fabric pipeline" idea appears to warrant inclusion among potential alternatives to be considered. The fabric pipelines themselves could apparently be rapidly fabricated and deployed, but the same may not be true with regard to pumps and intake and outfall features. If fabric pipelines were to be a potentially feasible part of our arsenal of response tools, then (1) the system would have to have been proof-tested, (2) intake and outfall preparations might have to be emplaced, and (3) working pumps might have to be acquired and tested in advance of the disaster.

Given that the current levels of risk are so high, and that the prospects for a rapid implementation of a secure long-term solution (e.g. a more "permanent" seismically secure facility) are both uncertain and remote with respect to even best-case timing; undertaking expeditious efforts to evaluate and implement "interim and emergency response enhancement" alternative should have the highest possible priority.

I hope this answers your questions. If you wish to discuss this further, I can usually best be reached either at this E-mail address, or on my cell phone at (925) 899-6101.

Best regards,

Ray Seed